JMIA KIT RACER

JAPAN MOTOR-RACING INDUSTRY ASSOCIATION

What is the JMIA KIT RACER

The JMIA Kit Racer is a revolutionary racing-car sales system. It enables customers to purchase an extremely durable, high-performance racing car at a significantly low cost, maintain it relatively inexpensively, select the most preferred specifications, and upgrade it according to their preferences whenever necessary.

Line-up of basic components

Complete Cars

No.1-4 cars are supplied as complete car or KIT RACER. No.5-6 are prototype.

No.1 ZAP F108(F4)

No.2 TOKYO R&D RD10W(F4)

No.3 MOON CRAFT MC-090(F4)

No.4 DOME F20

No.5 TOKYO R&D F20

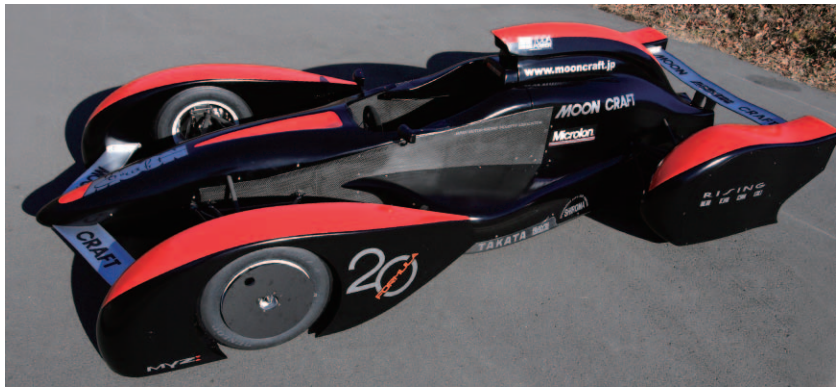

No.6 MOON CRAFT F20

Advantages of the JMIA KIT RACER

1 A custom racing car to your reference

JMIA member companies supply a wide variety of components. By combining those components, users can custom-build a racing car to their own preferences.

2 A low-cost and safe carbon monocoque by an epoch-making production method

The JMIA Kit Racer uses a carbon composite monocoque developed by JMIA. This low-cost monocoque results from an epoch-making production method. While its price is similar to that of an aluminum monocoque, the carbon composite monocoque is superior to an aluminum monocoque in rigidity, safety and durability.

3 Base components are the same as those used in Japan's successful F4 races

The F4 races were started in 1993 in Japan to provide a venue where racing-car constructors could demonstrate their expertise. All the components used in F4 racing cars have successful records and are robust and secure.

4 Wide range of engines

A wide range of engines is available, including standard engines of 1000cc to 2000cc, and original engines.

5 Custom development of engines and ECUs

Many JMIA member companies specialize in engine development and tuning. They can serve all your needs-modify your favorite commercially available car engine into a racing engine, develop a completely original engine, or custom-build electric components such as ECUs, to name a few possibilities.

6 Aerodynamic testing and body cowl development

JMIA member companies own a total of four wind tunnels for racing-car development, including one 50% wind tunnel and three 25% wind tunnels. Having excellent experience and successful records as developers, JMIA members can develop and produce carbon-composite body cowls while ensuring aerodynamic excellence.

7 Running-cost reduction

It is often the case that a one-make racing car is reasonably priced but spare parts are expensive. On the other hand JMIA Kit Racer components are reasonably priced. You can also supply yourself the components that can be made. You can save cost greatly.

8 Easy upgrading

JMIA Kit Racer components cover a wide variety of uses and you can upgrade the car according to your preferences by replacing them. For example, you can replace a 1000cc engine with a 1500cc one, or change the tire size, thus keeping the car up with the improvement of the driver's skills.

9 Custom styling

JMIA member companies include car constructors who are highly experienced in car design. They can offer sophisticated designs for formula cars and grand-touring cars.

10 JMIA can coordinate everything

The JMIA serves as your service desk in racing-car production. We will assist you in all the production processes. Please call or write to the JMIA. You can also directly contact a JMIA member company.

Major components of JMIA KIT RACER

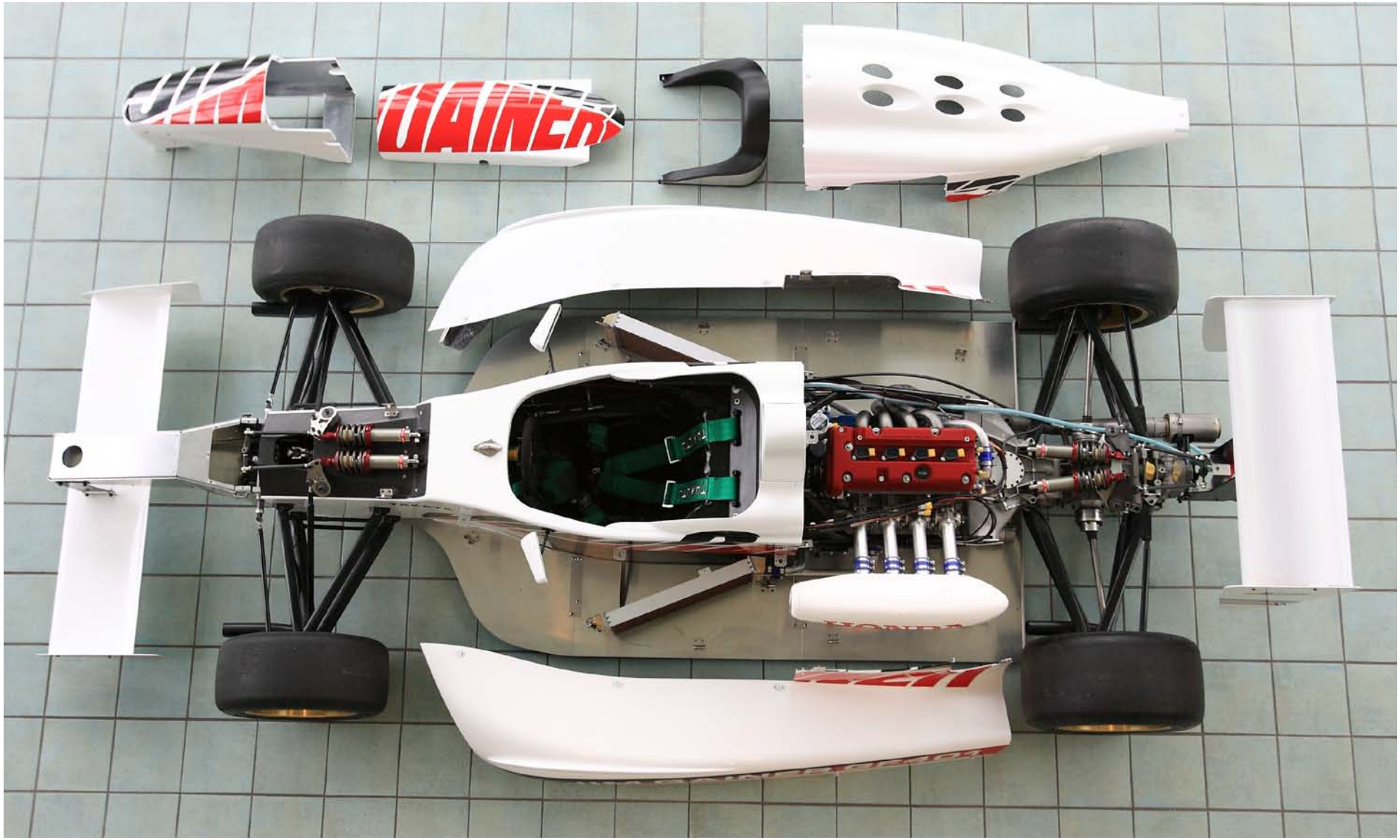

What is the JMIA Monocoque USM?

In spite of its high safety performance, a carbon monocoque is generally expensive and has not been commonly used as a component of junior formula cars, which are low-priced. The JMIA believes that a high-safety carbon monocoque is best-suited to junior formula cars, because the drivers in junior formula races are beginners. The JMIA has been committed to developing a carbon monocoque that would be as inexpensive as an aluminum monocoque (an aluminum monocoque used in the cars for F4 races, which are Japan's national races, costs about 1.3 million yen). However, reducing the cost of a carbon monocoque of normal structure is impossible. We therefore developed a brand-new, a solid carbon monocoque, USM, which is reasonably priced and high in rigidity and durability.

Advantages

● Exceptional structure produced by special production process

The USM monocoque has a very simple structure. Its exterior surface, which is produced on the reverse side of the mold in the conventional method, is smoothly finished at high precision by means of a special technology, acquired from experience in aircraft component development.

● Low production cost

The structure and production processes of the monocoque are simple; the production man-hours can be half those required conventionally. However, because the amounts of materials are increased, the total cost reduction is approximately 25%.

● High durability

The major causes of fatigue in carbon monocoques are deterioration in adhesion between CFRP boards and honeycomb structure, separation between the upper and lower parts, and the exfoliation of inserted metal components such as brackets. The USM's solid structure means there is no possibility of these failures. Ⓐ

● High compatibility

USM uses a solid structure and metal parts, such as brackets, which pinch the board that constitutes the solid structure. Accordingly, installation positions can be determined flexibly, enabling easy modification. Ⓑ

Formula 3 monocoque	3,500,000	Formula Renault monocoque	2,000,000
USM	1,000,000 - 1,400,000	Small formula monocoque	1,350,000

＊ price(JPY)

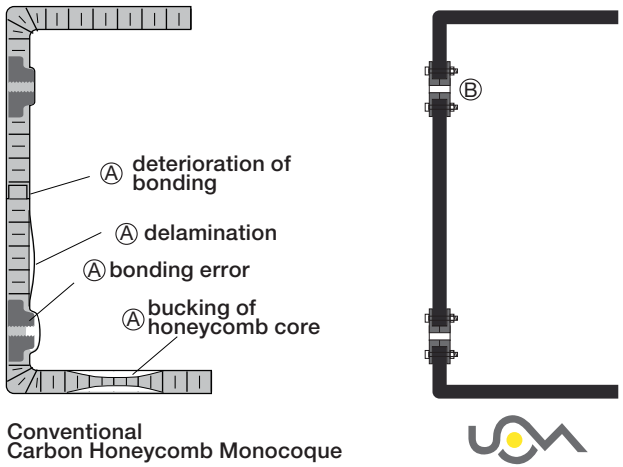

● High safety

Driving a racing car is never 100% safe, and if you pursue ultimate safety, you should not participate in auto racing.

In an accident, small impact absorption through aluminum honeycomb breakdown might save your life. In another case, the solid wall thickness might prevent another car's nose or a bent suspension arm from entering the car cabin.

The honeycomb structure is basically used to ensure high rigidity and low weight; it does not increase safety. If safety should take priority over low weight for beginners' formula race cars, the UOVA may be the best option.

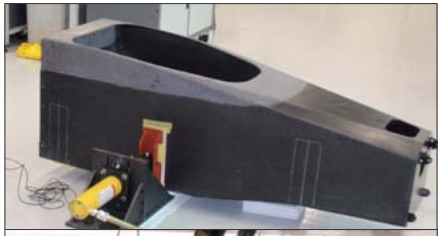

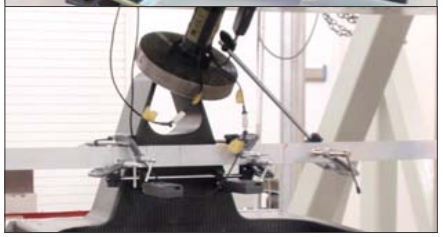

UOVA 20

UOVA 20 — JPY 1,220,000

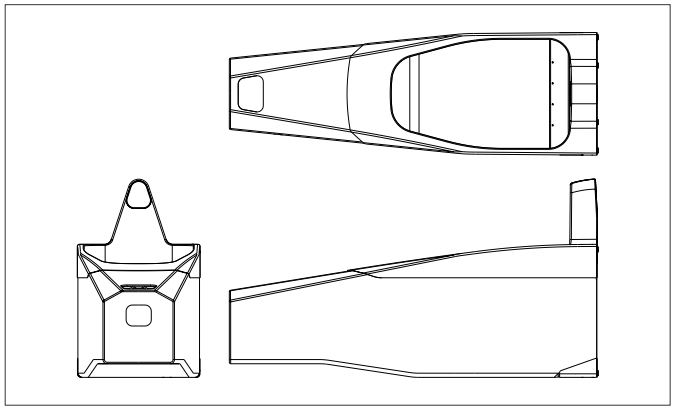

Low-cost model of simple structure, suitable for an engine of about 1000cc

UOVA 4 — JPY 1,400,000

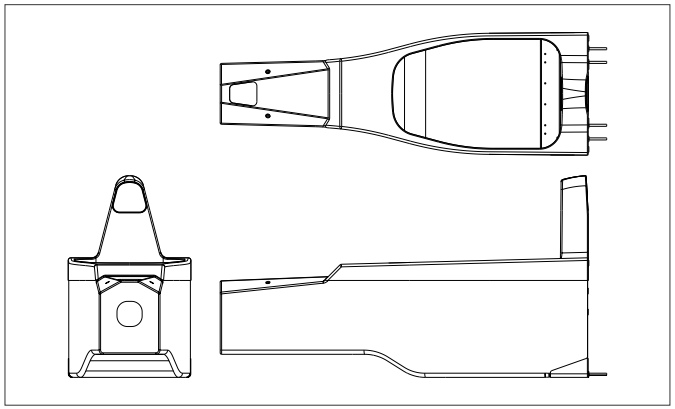

Standard model of increased safety and rigidity, suitable for an engine of about 2000cc

Optional Components

● Front crushable structure

To ensure sufficient safety of the carbon composite monocoque, a special structure is necessary to absorb shock before it reaches the body.

● Fuel tank

Bladder safety tank only for UOVA; 34-litter capacity.
These optional components are produced to order.
As for the lead time, price and other specifications, please specify when ordering UOVA.

	UOVA 20	UOVA 4
Weight	43kg	46kg
Dimensions (Length x Width x Height)	1,758x585x962	1,758x585x962
Thickness of side face	4.9mm	6.7mm
Supposed fuel tank capacity	35~40ℓ	35~40ℓ

The conventional monocoque safety standards are based on the condition that the monocoque has a honeycomb structure. It might not be appropriate to evaluate solid-structure UOVA based on these standards, but because there are no other applicable standards, we examine the safety of the UOVA based on the F3 safety standards of the FIA (Federation Internationale de l'Automobile).

JMIA Racing Engines

The member companies of the Japan Motor-racing Industry Association (JMIA) include leading companies specializing in racing-engine development and tuning. They can satisfy the needs of every user, by producing JMIA Kit Racer catalog-model engines, developing a completely new engine, modifying the engine of a ready-made car into a racing-car engine, or tuning up existing racing engines.

JMIA member companies can develop engine components such as pistons, connecting rods and camshafts as well as electrical instruments such as ECUs, and perform maintenance and overhauls, satisfying a wide variety of needs. The companies will be pleased to hear from you.

F4 ECU
R&Sports Development Ltd.

Formula 2 エンジン YAMAHA OX66 (1985-86)
KEN MATSUURA RACING

TODA RACING **TR-FX01** ORIGINAL ENGINE

Recently, most of the racing engines are customized from normal engines for commercial available cars in order to minimize costs. But, the fact remains that many people are attracted by the specialized racing engines because of its revving way and special sounds. TODA RACING has been developing and manufacturing the specialized engines consisting of originally designed components, and continuously carrying out test runs.

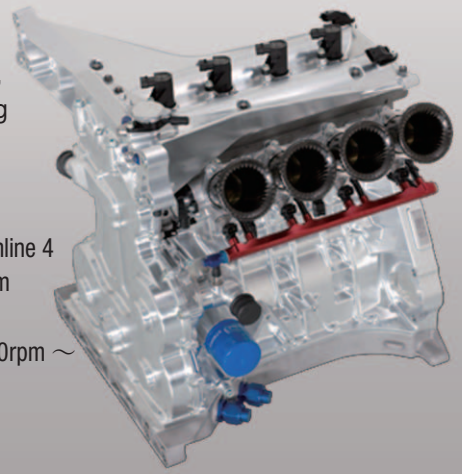

SPEC

Capacity :	1,998.2cc / Inline 4
Bore / Stroke :	86mm×86mm
Oil Sump System :	Dry
Power :	270hp / 8,500rpm ～
Weight :	87kg
Price :	TBA

JMIA KIT RACER Engine Catalog

This catalog lists JMIA-recommended high-cost-performance engines applicable to the JMIA Kit Racer. The list includes Toda engines and TOM's engines, both of which feature exceptional reliability, achieved by longtime experience, excellent expertise and participation in many races. These engines are optimal for entry-level racing cars.

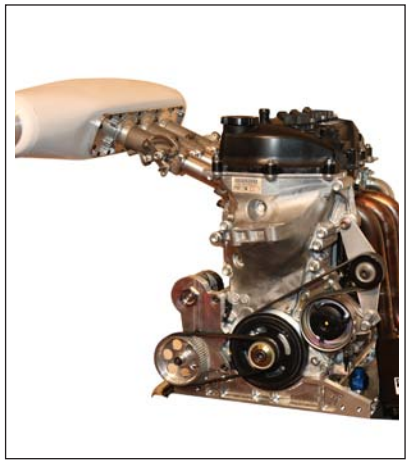

TOM'S 1KR SMALLER FORMULA RACING ENGINE	
Capacity	996cc / Inline 3
Bore / Stroke	71mm×83.9mm
Oil Sump System	Dry
Power	120Hp / 6,500rpm
Weight	60kg
Base Engine	TOYOTA 1KR
Price	1,980,000 JPY
TOM'S 1KR is a racing engine suitable for smaller formula cars of biginners.	

TODA RACING L15A SUPER FJ RACING ENGINE	
Capacity	1,496cc / Inline 4
Bore / Stroke	73.00mm (STD)×89.4mm
Oil Sump System	Wet
Power	130hp / 7,000rpm
Weight	83Kg
Base Engine	HONDA L15A
Price	760,000 JPY
TODA RACING L15A is a reasonably priced racing engine for super FJ, formula racing for beginners in Japan. Many drivers started his racing with this engine.	

TOM'S 3ZR F4 Racing Engine	
Capacity	1,982cc / Inline 4
Bore / Strok	80.5mm×97.4mm
Oil Sump System	Dry
Power	190Hp
Weight	90kg
Base Engine	TOYOTA 3ZR
Price	2,100,000 JPY
TOM'S 3ZR is a racing engine for F4 racing.	

TODA RACING K20A F4 RACING ENGINE	
Capacity	1,998.2cc / Inline 4
Bore / Strok	86.00mm (STD)×86.0mm
Oil Sump System	Dry
Power	170hp / 5,700rpm
Weight	-
Base Engine	HONDA K20A
Price	2,100,000 JPY
TODA RACING K20A is a racing engine for F4 racing.	

Japan Motor-racing Industry (JMIA)

The Japan Motor-racing Industry Association (JMIA) is the only auto-racing association in Japan. It includes about 60 companies engaged in the development and production of racing cars.
Member companies include Dome, which has participated in the Le Mans 16 times, using an original racing car; TOM'S, which is well-known as a Toyota-affiliated racing team and engine tuner; and NISMO, which is involved in Nissan racing activities. Concerning engine development, the Japanese racing industry's major companies participate in the JMIA: TOM'S, Toda Racing, and KEN Matsuura Racing. Your needs concerning racing cars are sure to be satisfied.


DOME CO., LTD.


TOM'S CO., LTD.

NISSAN MOTORSPORTS INTERNATIONAL CO., LTD.

TODA RACING CO., LTD.

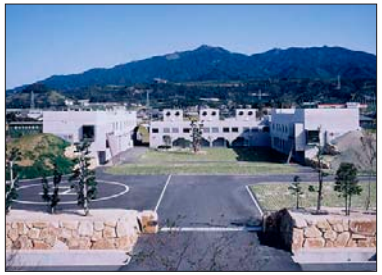
KEN MATSUURA RACING SERVICE CO., LTD.


MOONCRAFT CO., LTD.


TOKYO R&D CO., LTD.


TRD

Quote and purchase of JMIA KIT RACER

Purchase of a completed car

Please visit the JMIA web site for detailed information of a completed car, which is produced to order. Referring to the list of companies on the next page, please call or write to a constructor directly, or contact the JMIA.

Purchase of components

The JMIA web site has product brochures. Please check the model number of the component you need and call or write to the constructor directly, or contact the JMIA. Please check the compatibility table to ensure that the old component and new one are interchangeable.

Ordering an original car

Semi-order racing cars are available, by using the JMIA Kit Racer components as the base and by introducing original design to all parts. Of course entirely original cars are also available. Please contact the JMIA.

Ordering original components

At the JMIA, almost all components required for a racing car can be developed and produced. In addition, the JMIA can assist development in many respects, such as wind tunnel testing and strength calculation. Please contact a member company directly or contact the JMIA.

Points of contact

To inquire or purchase a completed car, engine or components, please contact directly the JMIA member company that produces and sells them.

When you purchase a variety of products or a great amount of products, the JMIA will assist your purchase. Please contact the JMIA.

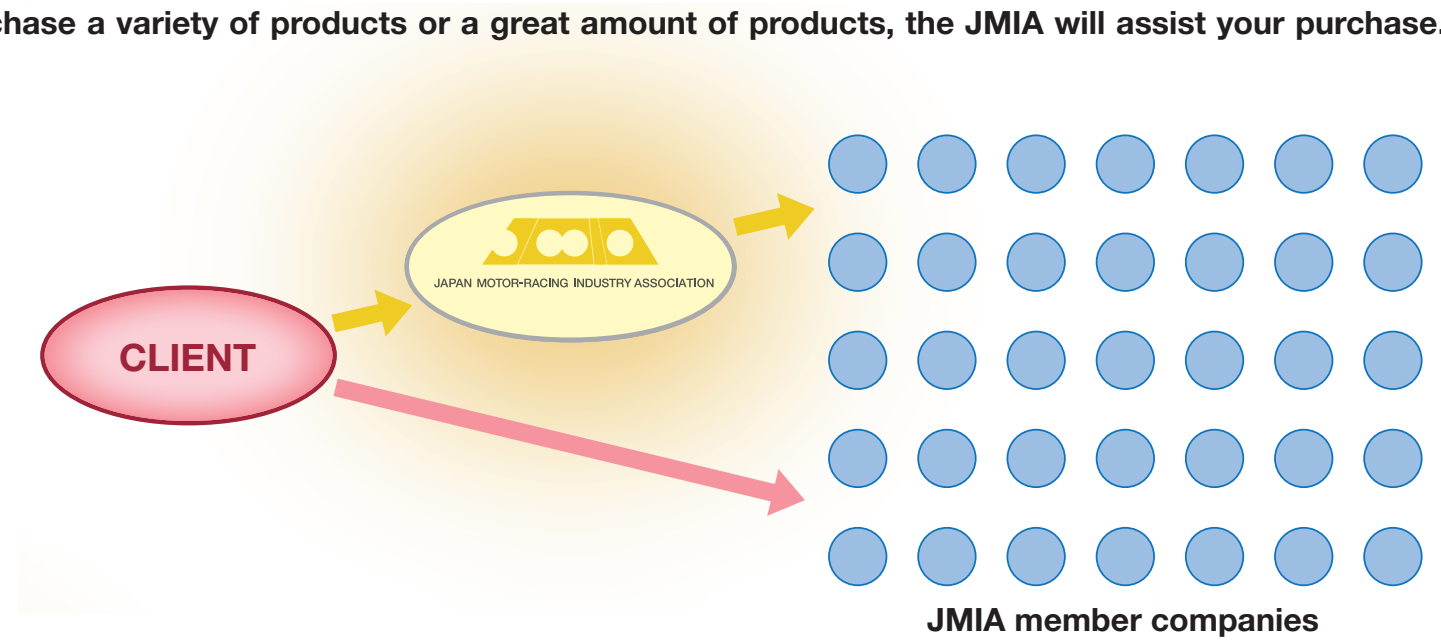

Japan Motor-Racing Industry Association

HEAD OFFICE 215-1, Miyoshi, Maibara, Shiga, 521-0023, Japan (DOME CO.,LTD.)
Tel.0749-54-1526 Fax.0749-54-1527 Url. www.jmia.jp

CONTACT PERSON

Takashi Miyaki **miyaki@jmia.jp**

Takehiko Tsukamoto **tsukamoto@jmia.jp**

JMIA member companies

For details regarding the businesses of member companies, please visit their web sites, via the JMIA web site's hyperlinks to them. If you are not sure which company would be your best selection, the JMIA will be pleased to assist you. Please contact the JMIA.

JMIA MONOCOQUE UOVA 4

JAPAN MOTOR-RACING INDUSTRY ASSOCIATION

HEAD OFFICE 215-1, Miyoshi, Maibara, Shiga, 521-0023, Japan (DOME CO.,LTD.)
Tel.0749-54-1526 Fax.0749-54-1527 E-mail post@jmia.jp Url. www.jmia.jp